GM 10

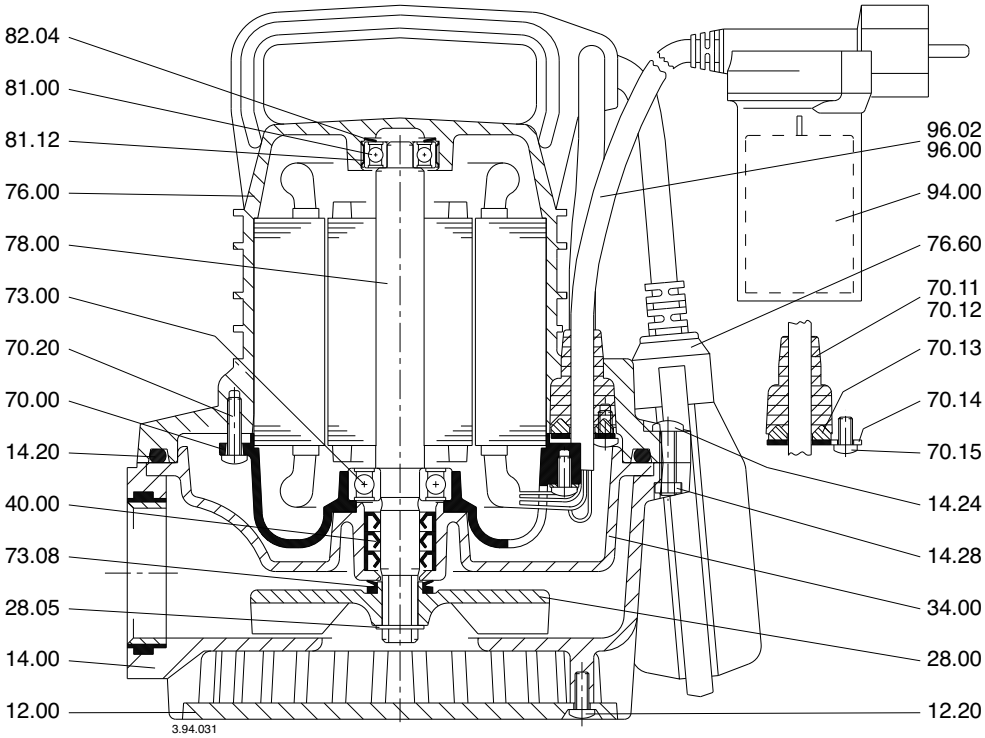
82.04
81.00
81.12
76.00
78.00
73.00
70.20
70.00
14.20
40.00
73.08
28.05
14.00
12.00
3.94.031
96.02
96.00
94.00
76.60
70.11
70.12
70.13
70.14
70.15
14.24
14.28
34.00
28.00
12.20